NEC

Since 1954

Comfort-02 Plus II

Your Seating Excellence

Anatomic & Ergonomic Office Chairs

COMFORT-02 PLUS II

ΑΝΑΤΟΜΙΚΗ & ΕΡΓΟΝΟΜΙΚΗ ΠΟΛΥΘΡΟΝΑ ΓΡΑΦΕΙΟΥ

Καρέκλα με ψηλή πλάτη και ρυθμιζόμενο προσκέφαλο

Κάθισμα από μορφοποιημένο αφρό μνήμης (memory foam)

Μπράτσα ρυθμιζόμενα σε 3 κατευθύνσεις με επιφάνεια από μαλακή πολυουρεθάνη

Μηχανισμός συγχρονισμένης ανάκλισης με 4 θέσεις κλειδώματος

Ρύθμιση έντασης ανάκλισης

Κάθισμα ρυθμιζόμενο σε βάθος (οριζόντια κίνηση)

Οσφυϊκή στήριξη από μαλακή πολυουρεθάνη με ρύθμιση ύψους

Ανάρτηση αερίου κατηγορίας 4 της εταιρείας Samhongsa

Βάση αλουμινίου με δυνατότητα φορτίου 1136 Kg

Τροχοί πολυουρεθάνης Φ 60 χιλ.

3 ΧΡΟΝΙΑ ΕΓΓΥΗΣΗ

BIFMA - SGS

ΛΕΙΤΟΥΡΓΙΕΣ

ΔΙΑΣΤΑΣΕΙΣ ΠΡΟΪΟΝΤΟΣ

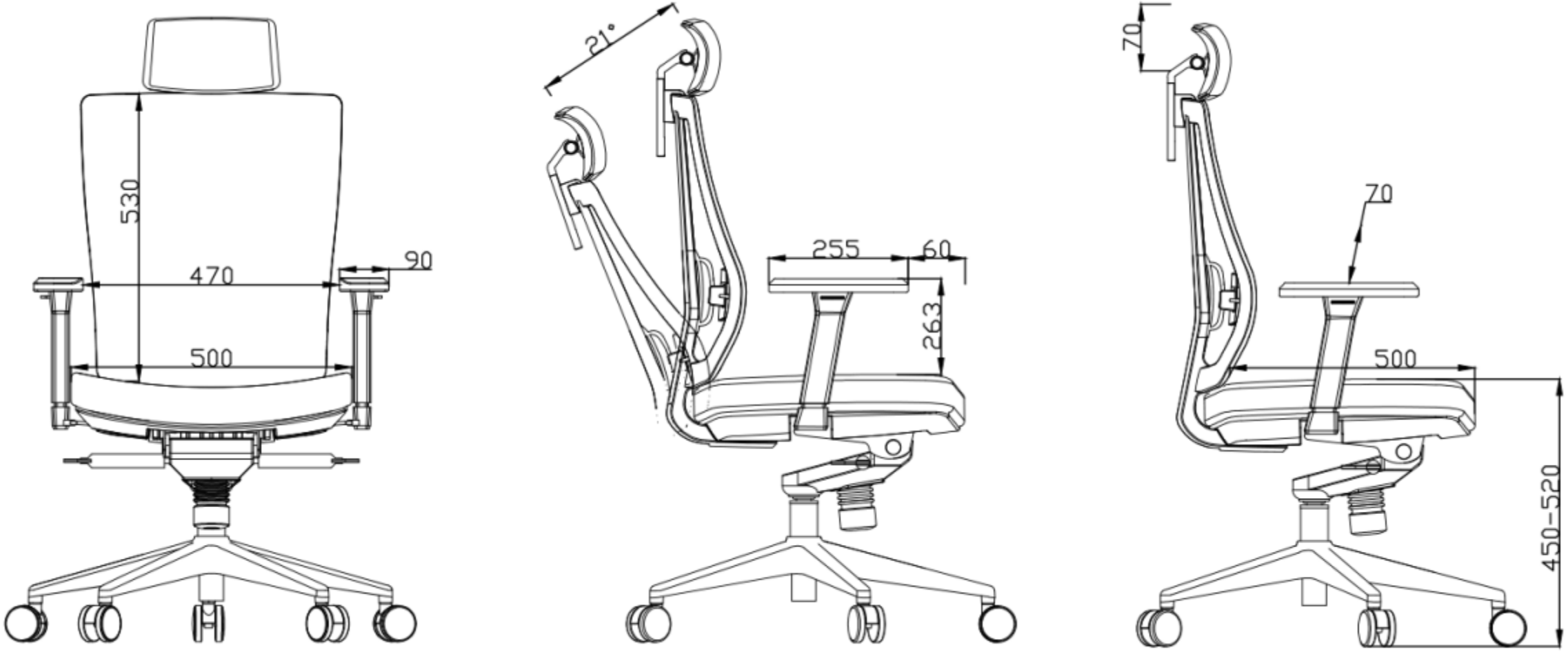

ΥΛΙΚΑ ΣΥΜΦΩΝΑ ΜΕ ΤΟ ΠΡΟΤΥΠΟ BIFMA

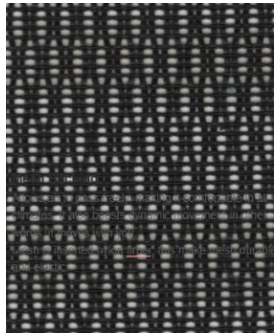

Πλέγμα πλάτης υψηλής αντοχής & ελαστικότητας, άθραυστο & άκαυστο

Ανάρτηση αερίου κατηγορίας 4 της Samhongsa
Το μαύρο έμβολο δέχεται επιφανειακή σκλήρυνση ώστε να είναι εξαιρετικά δυνατό
Πάχος τοιχώματος 2.5 χιλ.

Τροχοί πολυουρεθάνης *Φ* 60 χιλ.

Βάση αλουμινίου *Φ* 700 χιλ.

Αφρός μνήμης στο κάθισμα

ΠΙΣΤΟΠΟΙΗΤΙΚΑ BIFMA

SGS

Test Report No.: GZHL1609042270FT Date: Oct 27, 2016

The following sample(s) was/were submitted and identified on behalf of the client as:

Sample Description	: OFFICE CHAIR
SGS Ref No.	: SDHL1609018445FT
Style / Item No.	:
Sample Receiving Date	: Sep 28, 2016
Sample Resubmission Date	: Oct 20, 2016
Test Performing Date	: Sep 28, 2016 to Oct 26, 2016

Test Result Summary

Test(s) Requested	Result(s)
Partial tests of ANSI/BIFMA X5.1:2011 (Type I, III)	PASS

Summary:

1. For further details, please refer to the following page(s).

Signed for and on behalf of
Guangzhou Branch
SGS-CSTC Ltd.

Arthur Mak
Approved Signatory

Unless otherwise agreed in writing, this document is issued by the Company subject to its General Conditions of Service printed overleaf, available on request or accessible at http://www.sgs.com/en/Terms-and-Conditions.aspx and, for electronic format documents, subject to Terms and Conditions for Electronic Documents at http://www.sgs.com/en/Terms-and-Conditions/Terms-e-Document.aspx. Attention is drawn to the limitation of liability, indemnification and jurisdiction issues defined therein. Any holder of this document is advised that information contained hereon reflects the Company's findings at the time of its intervention only and within the limits of Client's instructions, if any. The Company's sole responsibility is to its Client and this document does not exonerate parties to a transaction from exercising all their rights and obligations under the transaction documents. This document cannot be reproduced except in full, without prior written approval of the Company. Any unauthorized alteration, forgery or falsification of the content or appearance of this document is unlawful and offenders may be prosecuted to the fullest extent of the law. Unless otherwise stated the results shown in this test report refer only to the sample(s) tested and such sample(s) are retained for 30 days only.
Attention: To check the authenticity of testing / inspection report & certificate, please contact us at telephone: (86-755) 8307 1443, or email: CN.Doccheck@sgs.com
中国·广州·经济技术开发区科学城科珠路198号 邮编: 510663 t (86-20) 82155555 f (86-20) 82075191 www.sgsgroup.com.cn
Member of the SGS Group (SGS SA)

SGS

Test Report No.: GZHL1609042270FT Date: Oct 27, 2016

TESTS AND RESULTS

Test Conducted:
Partial tests of ANSI/BIFMA X5.1:2011 General-Purpose Office Chairs – Tests.

No. of Sample:
1 piece (Sample 1). For more sample information and pictures, please refer to the following page.

Chair Type: Type I, III.

Test and Requirements	Test Results
Safety, Durability and Structural Adequacy	
5 Backrest Strength Test - Static - Type I	
5.4.1 Functional Load There shall be no loss of serviceability to the chair when 890 N (200 lbf.) is applied to the backrest at the specified position for one (1) minute. With the backrest at its back stop position, apply a force that is initially 90 degrees ± 10 degrees to the plane of the backrest. The force is not intended to be maintained at 90 degrees ± 10 degrees throughout the loading of the backrest.	PASS
5.4.2 Proof Load There shall be no sudden and major change in the structural integrity of the chair, loss of serviceability is acceptable, when 1334 N (300 lbf.) is applied to the backrest at the specified position for one (1) minute. With the backrest at its back stop position, apply a force that is initially 90 degrees ± 10 degrees to the plane of the backrest. The force is not intended to be maintained at 90 degrees ± 10 degrees throughout the loading of the backrest.	PASS
8 Drop Test - Dynamic	
8.4.1 Functional Load Test There shall be no loss of serviceability when a test bag weighing 102 kg (225 lb.) is free fell from152 mm (6 in.) above the uncompressed seat to the specified position on seat. Remove the bag, and set height to its lowest position and repeat the test for chairs with seat height adjustment features.	PASS
8.4.2 Proof Load Test There shall be no sudden and major change in the structural integrity of the chair. Loss of serviceability is acceptable when a test bag weighing 136 kg (300 lb.) is free fell from152 mm (6 in.) above the uncompressed seat to the specified position on seat. Remove the bag, and set height to its lowest position and repeat the test for chairs with seat height adjustment features.	PASS

Unless otherwise agreed in writing, this document is issued by the Company subject to its General Conditions of Service printed overleaf, available on request or accessible at http://www.sgs.com/en/Terms-and-Conditions.aspx and, for electronic format documents, subject to Terms and Conditions for Electronic Documents at http://www.sgs.com/en/Terms-and-Conditions/Terms-e-Document.aspx. Attention is drawn to the limitation of liability, indemnification and jurisdiction issues defined therein. Any holder of this document is advised that information contained hereon reflects the Company's findings at the time of its intervention only and within the limits of Client's instructions, if any. The Company's sole responsibility is to its Client and this document does not exonerate parties to a transaction from exercising all their rights and obligations under the transaction documents. This document cannot be reproduced except in full, without prior written approval of the Company. Any unauthorized alteration, forgery or falsification of the content or appearance of this document is unlawful and offenders may be prosecuted to the fullest extent of the law. Unless otherwise stated the results shown in this test report refer only to the sample(s) tested and such sample(s) are retained for 30 days only.
Attention: To check the authenticity of testing / inspection report & certificate, please contact us at telephone: (86-755) 8307 1443, or email: CN.Doccheck@sgs.com
中国·广州·经济技术开发区科学城科珠路198号 邮编: 510663 t (86-20) 82155555 f (86-20) 82075191 www.sgsgroup.com.cn
Member of the SGS Group (SGS SA)

SGS

Test Report No.: GZHL1609042270FT Date: Oct 27, 2016

Test and Requirements	Test Results
12.3.2 Rear Stability Test for Type I and II Chairs Place a support fixture made of a 1.5 mm ± 0.4 mm (0.060 in. ± 0.015 in.) thick polypropylene, 356 mm (14 in.) wide and 711 mm (28 in.) tall against the chair back so that it approximates the contour of the back. Load the chair with 13 disks. Place the first disk on the seat so it touches the support fixture. As each disk is added to the stack slide it along the lower disk until it contacts the support fixture. If the chair does not tip over and the tilt mechanism does not tilt to its most rearward position (i.e., at its tilt stop) when the disks are placed in the chair, the chair shall also be tested according to 12.3.1 with the chair in the unlocked position. The chair shall not tip over.	PASS
12.4 Front Stability Test Procedure - Alternative A (This alternative may only be used on chairs that do not have a seat surface that will support the stability loading fixture (i.e., mesh, web or strap seat support surfaces)) Apply a vertical load of 600 N (135 lbf.), through a 200 mm (7.87 in.) diameter disk, the center of which is 60 mm (2.4 in.) from the front center edge of the load-bearing surface of the seat. Apply a horizontal force of 20 N (4.5 lbf.) at the same level of the plane of the top of the seat. The force shall be coincident with the side-to-side centerline of the seat. Test Procedure - Alternative B Apply a vertical load of 600 N (135 lbf.), by means of the front stability loading fixture at a point 60 mm (2.4 in.) from the front center edge of the load-bearing surface of the chair. Apply a horizontal force of 20 N (4.5 lbf.) at the same level of the plane of the top of the seat. The force shall be coincident with the side-to-side centerline of the seat. The chair shall not tip over as the result of the force application.	PASS

Unless otherwise agreed in writing, this document is issued by the Company subject to its General Conditions of Service printed overleaf, available on request or accessible at http://www.sgs.com/en/Terms-and-Conditions.aspx and, for electronic format documents, subject to Terms and Conditions for Electronic Documents at http://www.sgs.com/en/Terms-and-Conditions/Terms-e-Document.aspx. Attention is drawn to the limitation of liability, indemnification and jurisdiction issues defined therein. Any holder of this document is advised that information contained hereon reflects the Company's findings at the time of its intervention only and within the limits of Client's instructions, if any. The Company's sole responsibility is to its Client and this document does not exonerate parties to a transaction from exercising all their rights and obligations under the transaction documents. This document cannot be reproduced except in full, without prior written approval of the Company. Any unauthorized alteration, forgery or falsification of the content or appearance of this document is unlawful and offenders may be prosecuted to the fullest extent of the law. Unless otherwise stated the results shown in this test report refer only to the sample(s) tested and such sample(s) are retained for 30 days only.
Attention: To check the authenticity of testing / inspection report & certificate, please contact us at telephone: (86-755) 8307 1443, or email: CN.Doccheck@sgs.com
中国·广州·经济技术开发区科学城科珠路198号 邮编: 510663 t (86-20) 82155555 f (86-20) 82075191 www.sgsgroup.com.cn
Member of the SGS Group (SGS SA)